jaquar.com

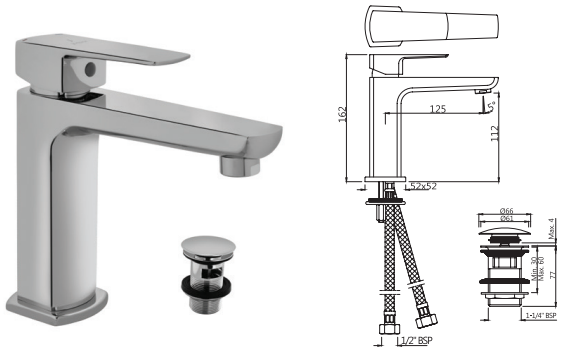

Product Code	KUP-CHR-35011BPMCLW
Description	Mono Basin Mixer with click clack waste (ALD-729)
Connection Size	Braided hoses, 1/2” FIP (WRAS Approved) Withstand pressure of 10 Bar
Flow Rate	13.09 LPM @ 3 bar
Flow regulator	By using flow regulators (Product should be ordered with suffix as G-2.5 LPM, GA-6.0 LPM, GB-8.0 LPM, GC-13.0 LPM, GD-3.8 LPM & GE-1.3 LPM @ 3.0 Bar pressure) one can regulate the flow rate.
Recommended Water Pressure	0.5 Bar - 5 Bar
Brass Specification in Percentage	**Brass Ingots as per IS:1264-1997** Cu (58.0-63.0), Sn (0.0-1.0), Pb (0.5-2.5), Ni (0.0-1.0), Al (0.2-0.8), Mn (0.0-0.5), Total Impurity (0.0-2.0), Zn (Remainder) **Brass Rod as per IS:319-1989** Cu (56.0-59.0), Pb (2.0-3.5), Fe (0.0-0.35), Total Impurity (0.0-0.7), Zn (Remainder) **Brass Sheets as per IS:410-1977** Cu (61.5-64.5), Pb (0.0-0.3), Fe (0.0-0.075), Total Impurity (0.0-0.6), Zn (Remainder)
Cartridge Specification	NSF-61 Approved Cartridge with Temperature Limiter Cartridge with Brass Spindle Life Cycle EN 817: 70,000 cycles (Standard) - 2.1 LAC Cycles as per EN 817* - 10.5 LAC Cycles (ON/OFF)*
Accessories incl.	Click Clack Basin Waste
Water Tightness	16 bar (Pass)
Pressure Resistance	25 bar (Pass)
Finish	Plating: Nickel-10.0 micron Chromium-0.3 micron Salt Spray (500 hrs + Validated) Adhesion (Pass)
Aerator Size	WRAS, ACS Approved (M20X1)
Available Colour Finishing	Antique Bronze (ABR), Antique Copper (ACR), Black Chrome (BCH), Black Matt (BLM), Gold Dust (GDS), Full Gold (GLD), Graphite (GRF), Stainless Steel Finish (SSF) & White Matt (WHM)
*** As per in-house testing done on automatic life cycle testing machine made by Giussain, Italy**	
DISCLAIMER: Our every effort has been made to ensure factual accuracy, the information presented subject to changes due to requirements in different sites, markets and/ or countries. 10% variation in flow rate may be possible. Jaquar reserves the right to make the necessary amendments at any time without prior notice.	